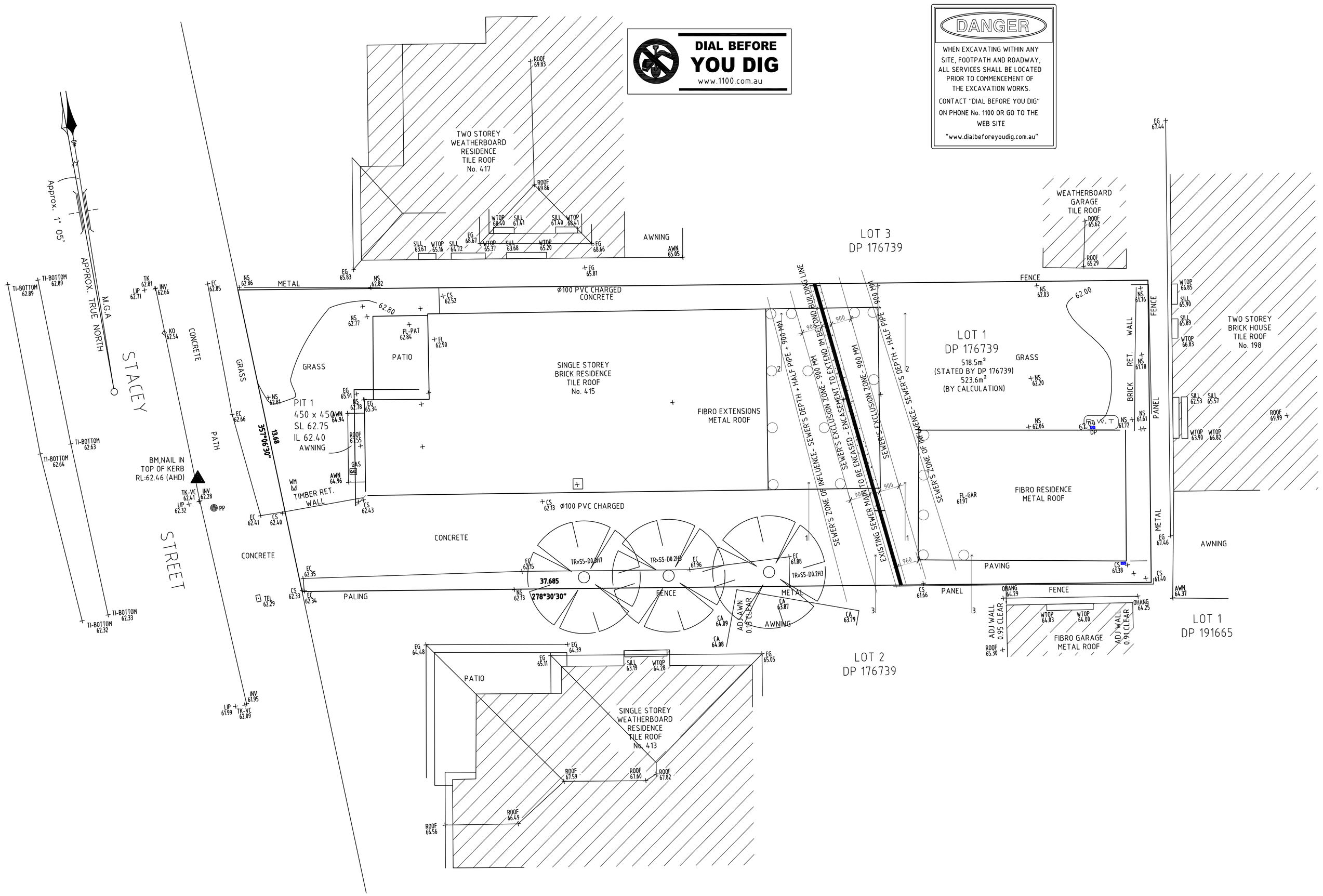

STRUCTURAL AND SITE PLAN

DENOTES MASS CONCRETE PIERS- MIN 1 M DEEP OR BELOW THE ZONE OF INFLUENCE OF SEWER- WHICHEVER IS DEEPER
FLOOR OF DECK- 240 X LVL @ 450 C/C.

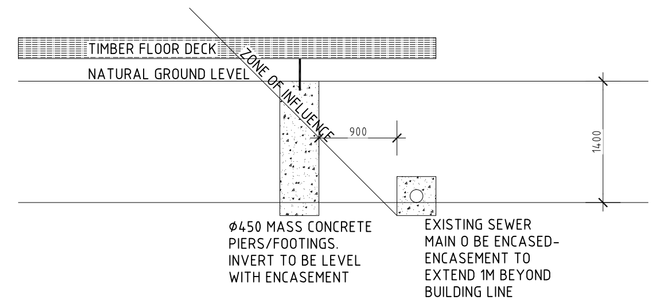

SEWER'S ENCASEMENT SECTION 1-1

MAIN RESIDENCE

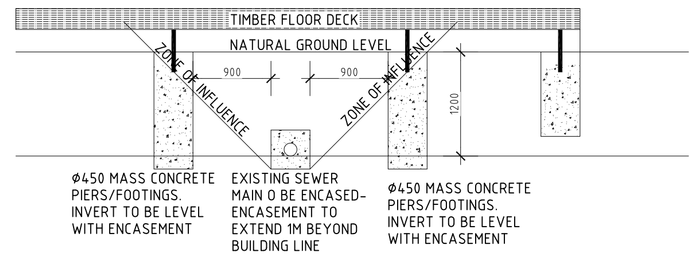

SEWER'S ENCASEMENT SECTION 2-2

MAIN RESIDENCE

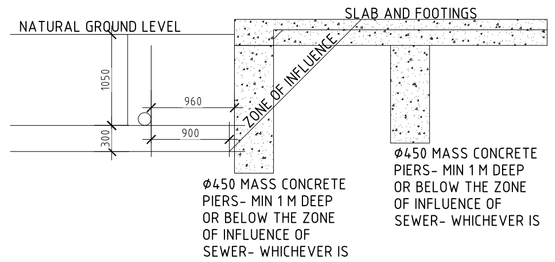

SEWER'S ENCASEMENT SECTION 3-3

OUTBUILDING

Monzer M Farah
MIEAust MEng
Professional Engineer
Membership No. 1146394
The Institution of Engineers Australia

	AMENDMENTS	DATE
M.M.FARAH CIVIL/STRUCTURAL PTY/LTD	DESIGNED	SCALE
PROPOSED NEW DEVELOPMENT AT NO 415 STACEY STREET BANKSTOWN NEW SOUTH WALES	M.M.FARAH CIVIL/STRUCTURAL PTY/LTD LEVEL 1, 3/18 MCFARLANE ST MERRYLANDS NSW 2160 0411 780 327	1:100 @ A1 1:200 @ A3 DRAWN MMF 09-03-2023
STRUCTURAL AND SITE PLAN- SEWER SECTIONS	SHEET NO 1 OF 1	JOB # SEWER-415 STACEY